14.Front Vehicle Speed Sensor

A: REMOVAL

1) Set the vehicle on a lift.
2) Disconnect the ground cable from the battery.
3) Remove the air intake chamber. (Non-turbo model) <Ref. to IN(H4SO)-6, REMOVAL, Air Intake Chamber.>
4) Remove the intercooler. (Turbo model) <Ref. to IN(H4DOTC)-13, REMOVAL, Intercooler.>
5) Disconnect the transmission connector.

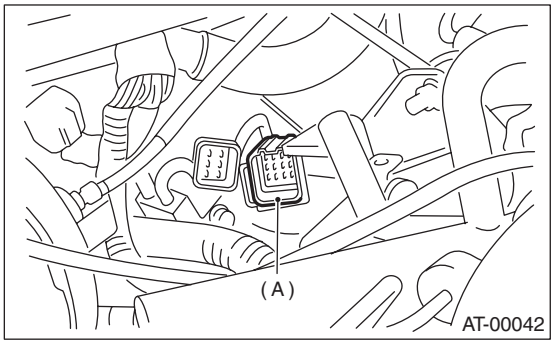

(A) Transmission connector

6) Remove the pitching stopper. <Ref. to 4AT-43, REMOVAL, Transmission Mounting System.>
7) Remove the transmission connector from stay.
8) Lift up the vehicle.
9) Clean the transmission exterior.
10) Drain the ATF completely.

NOTE:
- Tighten the ATF drain plug after draining the ATF.
- Use a new gasket.

Tightening torque:
25 N·m (2.5 kgf-m, 18.4 ft-lb)

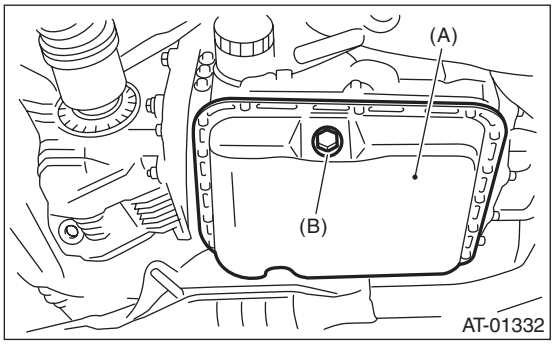

(A) Oil pan
(B) Drain plug (ATF)

11) Remove the front, center exhaust pipe and the muffler. (Non-turbo model) <Ref. to EX(H4SO)-4, REMOVAL, Front Exhaust Pipe.> <Ref. to EX(H4SO)-8, REMOVAL, Rear Exhaust Pipe.> <Ref. to EX(H4SO)-9, REMOVAL, Muffler.>
12) Remove the center and rear exhaust pipes and the muffler. (Turbo model) <Ref. to EX(H4DOTC)-10, REMOVAL, Center Exhaust Pipe.> <Ref. to EX(H4DOTC)-15, REMOVAL, Rear Exhaust Pipe.> <Ref. to EX(H4DOTC)-17, REMOVAL, Muffler.>
13) Remove the propeller shaft. <Ref. to DS-15, REMOVAL, Propeller Shaft.>
14) Place the transmission jack under the transmission.

NOTE:
Make sure that the support plate of transmission jack does not touch the cross.

15) Remove the transmission rear crossmember bolt.

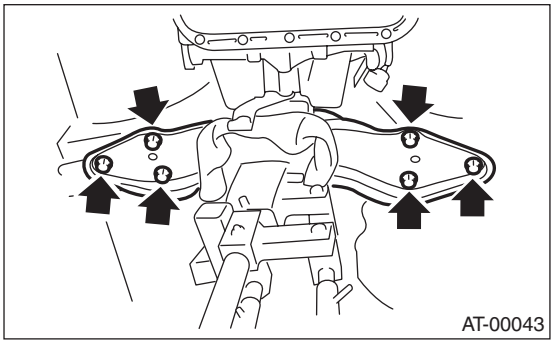

16) Lower the transmission jack.

NOTE:
Do not separate the transmission jack and transmission.

17) Remove the oil cooler inlet and outlet pipes.

NOTE:
When removing the outlet pipe, be careful not to lose the ball and spring used together with retaining screw.

18) Remove the front vehicle speed sensor and torque converter turbine speed sensor.

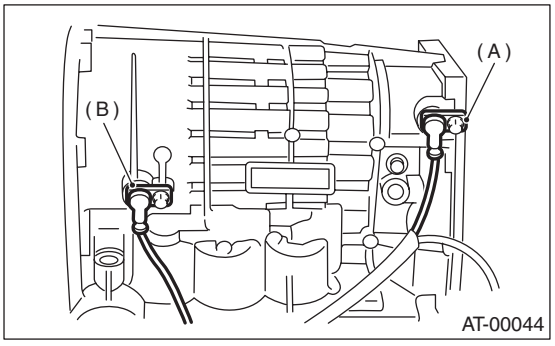

(A) Front vehicle speed sensor
(B) Torque converter turbine speed sensor

19) Disconnect the connector from the rear vehicle speed sensor. (VTD model)

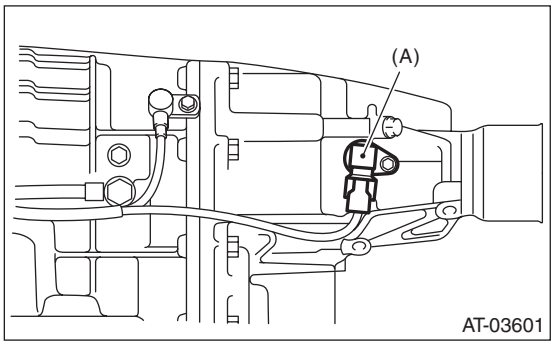

(A) Rear vehicle speed sensor

20) Disconnect the connector from the rear vehicle speed sensor. (MP-T model)

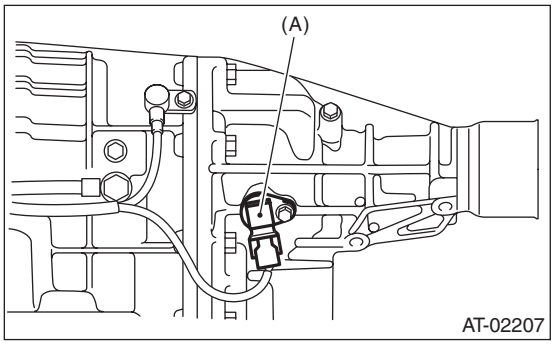

(A) Rear vehicle speed sensor

21) Remove the oil pan.

NOTE:
Be careful not to allow foreign matter such as dust or dirt to enter the oil pan.

22) Disconnect the harness connector and transmission ground terminal.

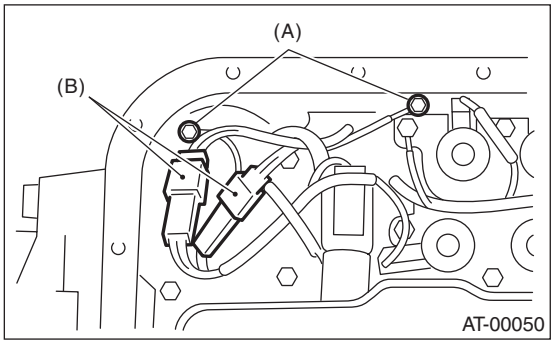

(A) Transmission ground
(B) Harness connector

23) Remove the harness assembly.

B: INSTALLATION

1) Pass the harness assembly through the hole in transmission case.

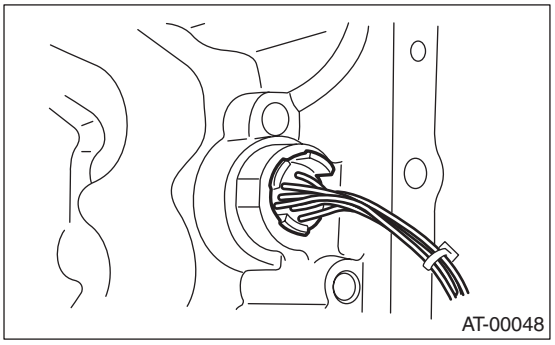

2) Connect the harness connector and transmission ground.

Tightening torque:
8 N·m (0.8 kgf-m, 5.8 ft-lb)

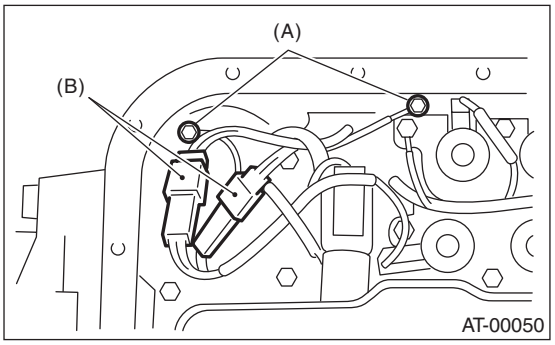

(A) Transmission ground
(B) Harness connector

3) Apply proper amount of liquid gasket to the entire oil pan mating surface.

Liquid gasket:
THREE BOND 1217B (Part No. K0877YA020) or equivalent

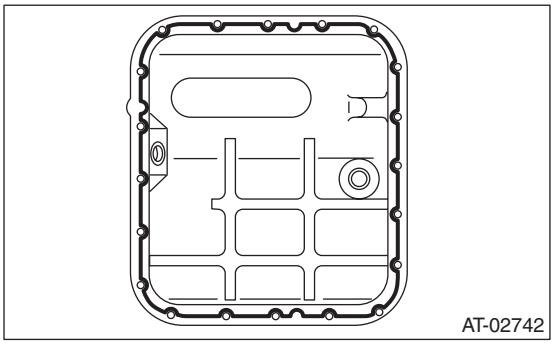

4) Apply an adequate amount of liquid gasket to the three holes excluding the screw holes of the transmission case.

Liquid gasket:
THREE BOND 1217B (Part No. K0877YA020) or equivalent

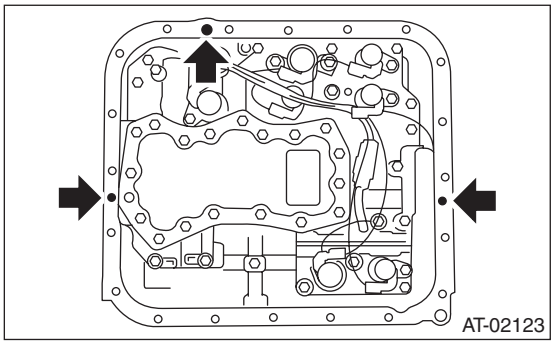

5) Install the oil pan.

Tightening torque:
5 N·m (0.5 kgf-m, 3.6 ft-lb)

6) Connect the connector of the rear vehicle speed sensor. (MP-T model)

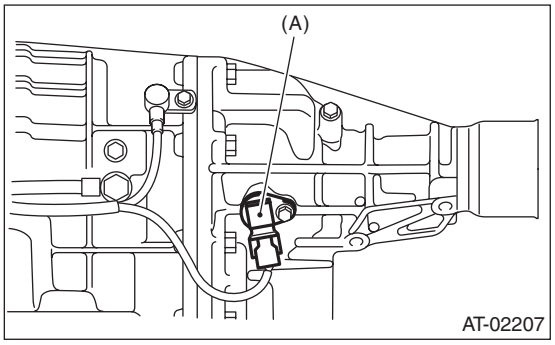

(A) Rear vehicle speed sensor

7) Connect the connector of the rear vehicle speed sensor. (VTD model)

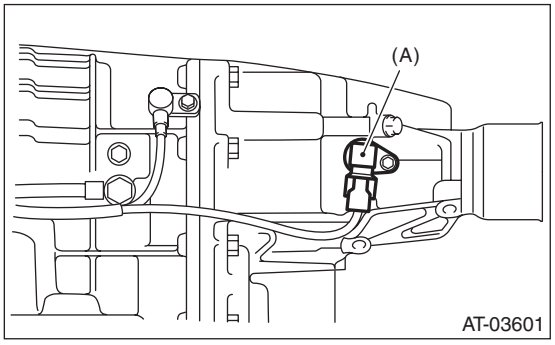

(A) Rear vehicle speed sensor

8) Install the front vehicle speed sensor and torque converter turbine speed sensor, and then fasten the harness.

Tightening torque:
7 N·m (0.7 kgf-m, 5.1 ft-lb)

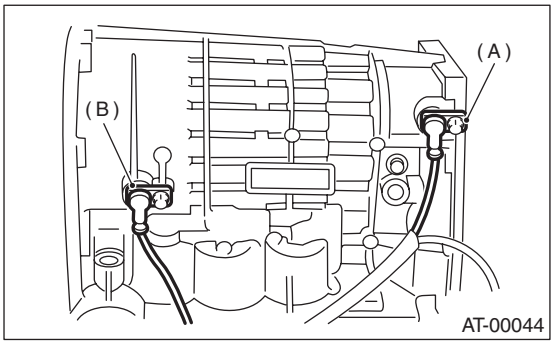

(A) Front vehicle speed sensor
(B) Torque converter turbine speed sensor

9) Install the inlet pipe.

NOTE:
Use a new copper washer.

Tightening torque:
T1: 25 N·m (2.5 kgf-m, 18.4 ft-lb)
T2: 40 N·m (4.1 kgf-m, 29.5 ft-lb)
T3: 45 N·m (4.6 kgf-m, 33 ft-lb)

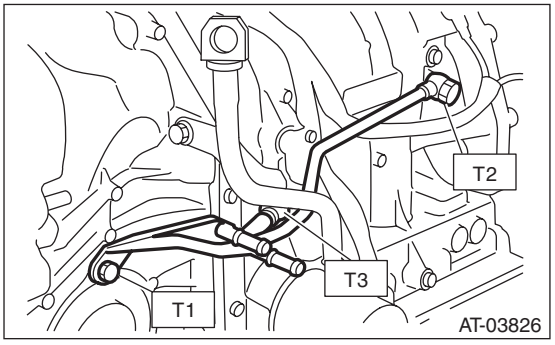

10) Install the transmission rear crossmember bolt.

Tightening torque:
70 N·m (7.1 kgf-m, 51 ft-lb)

11) Install the propeller shaft. <Ref. to DS-16, INSTALLATION, Propeller Shaft.>

12) Install the front, center and rear exhaust pipes, and the muffler. (Non-turbo model) <Ref. to EX(H4SO)-5, INSTALLATION, Front Exhaust Pipe.> <Ref. to EX(H4SO)-8, INSTALLATION, Rear Exhaust Pipe.> <Ref. to EX(H4SO)-9, INSTALLATION, Muffler.>

13) Install the center, rear exhaust pipes and the muffler. (Turbo model) <Ref. to EX(H4DOTC)-11, INSTALLATION, Center Exhaust Pipe.> <Ref. to EX(H4DOTC)-15, INSTALLATION, Rear Exhaust Pipe.> <Ref. to EX(H4DOTC)-17, INSTALLATION, Muffler.>

14) Lower the vehicle.
15) Install the transmission connector to the stay.
16) Install the pitching stopper. <Ref. to 4AT-43, INSTALLATION, Transmission Mounting System.>
17) Install the air intake chamber. (Non-turbo model) <Ref. to IN(H4SO)-6, INSTALLATION, Air Intake Chamber.>
18) Install the intercooler. (Turbo model) <Ref. to IN(H4DOTC)-14, INSTALLATION, Intercooler.>